REV.	DESCRIPTION	DRAWN	ECN	DATE
C	SEE ECN	ANGELA	98-410	12-22'98
D	SEE ECN	TINA	06-353	12-21'2006

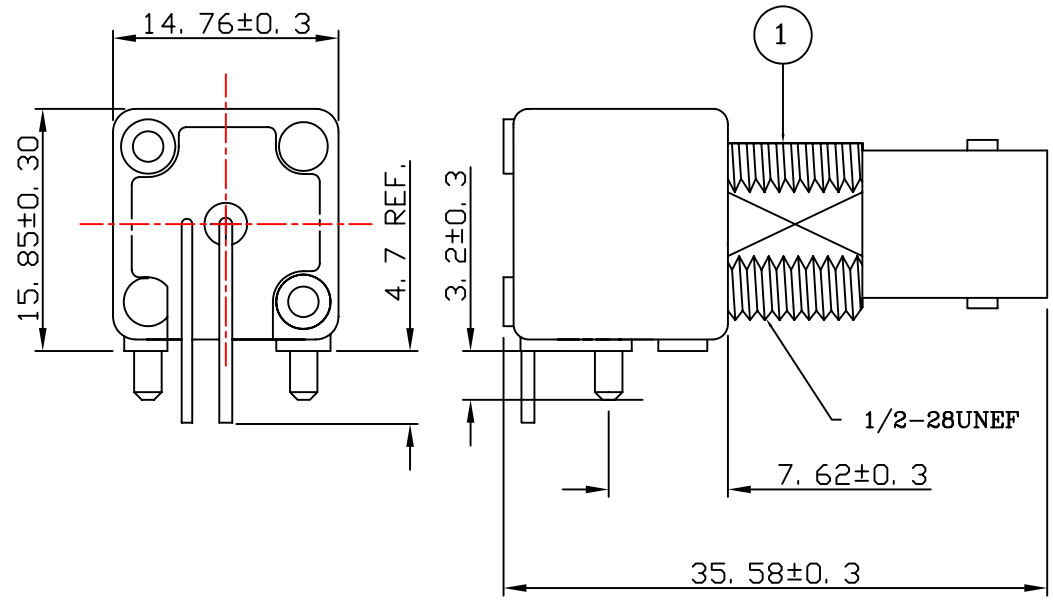

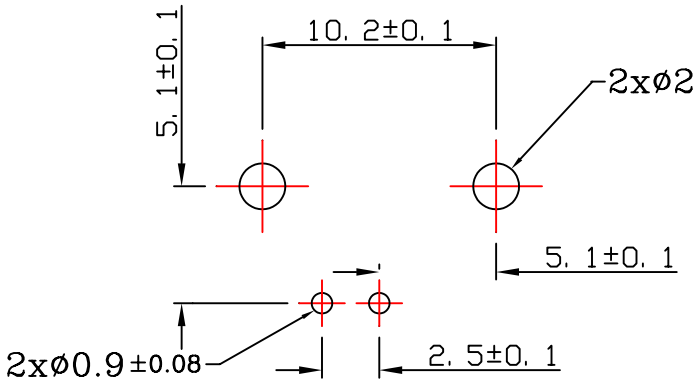

PCB HOLE CONFIGURATION

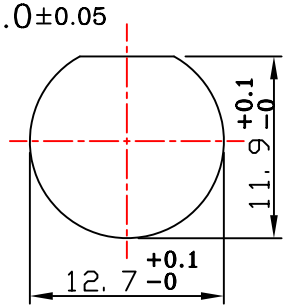

PANEL CUTOUT

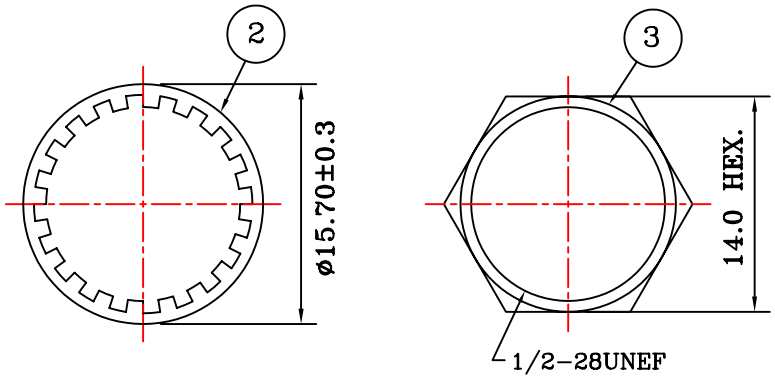

NOTES:

1. NOMINAL IMPEDANCE _75_ OHMS.
2. FREQUENCY RANGE:0-1 GHz.
3. MAX PEAK VOLTAGE: 500V.
4. INSULATION RESISTANCE: 5000 MEGOHMS MIN.
5. DIELECTRIC WITHSTANDING VOLTAGE:1500 VOLTS RMS.

ORDER NO.	BRAND
3105-000B	NONE
3105-100B	IO

ITEM	DESCRIPTION	MATERIAL	PLATING	PART NUMBER	QTY
3	NUT	BRASS	NICKEL	073000-109	1
2	LOCK WASHER	SK-5	NICKEL	083000-509	1
1	GROUNDING	Cu COVERED STEEL	TIN	3105-***B1	1
	POST	BRASS	TIN		
	CONTACT	P.BRONZE	GOLD & TIN		
	INSULATOR	P.P	NONE		
	BODY	ZINC ALLOY	NICKEL		

RoHS
COMPLIANT
2002/95/EC

UNLESS OTHERWISE SPECIFIED ALL TOLERANCES ARE:

DIMENSION		ANGLE	
INTEGRAL DIMENSIONS	±1.0	ANGULAR DIMENSIONS	±5.0°
1 PLACE DECIMAL	±0.3	HOLES UNDER ø0.5	±0.1
2 PLACE DECIMALS	±0.15	ROUGHNESS	

FINISH: SEE TABLE
MATERIAL: SEE TABLE

micon Precise Corp.

DRAWED BY:		DATE:	08-29'95
ENGR BY:		DATE:	
APVD BY:		DATE:	

TITLE: BNC R/A JACK PCB RECEPTACLE
Model NO: 3105-***B
Drawing NO.: 3105-***B

UNIT:	MM	SIZE: A4	REV. D	CAD FILE :
SCALE:	5:1	SHEET 1 OF 1		Z:\Sales\BNC\