REV.	DESCRIPTION	DRAWN	ECN	DATE
D	SEE ECN (M910511)	AMOUR	02-118	05-09'2002
E	SEE ECN	TINA	06-353	12-21'2006
F	增加剖視圖	TINA	08-140	06-12'2008

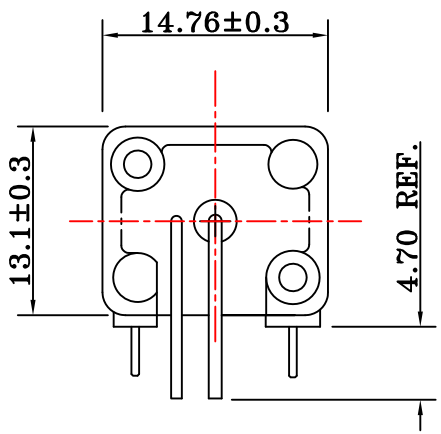

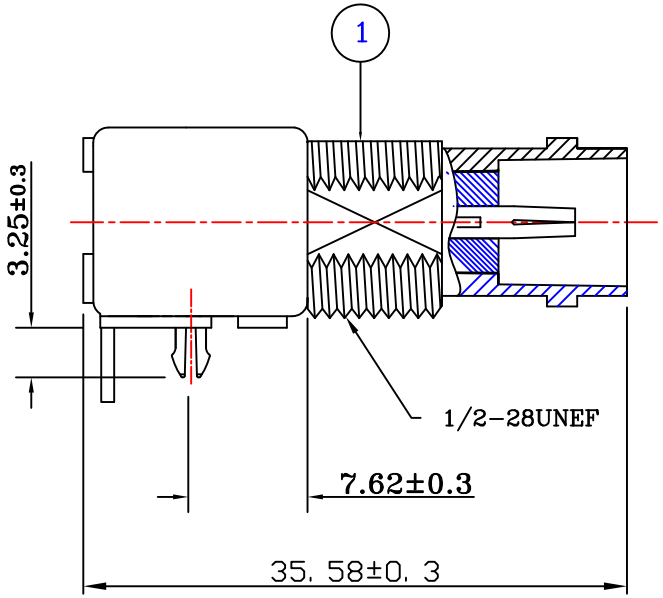

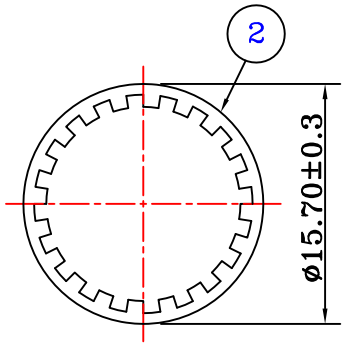

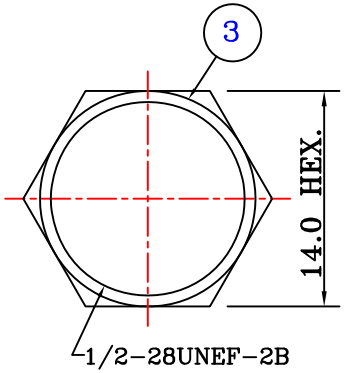

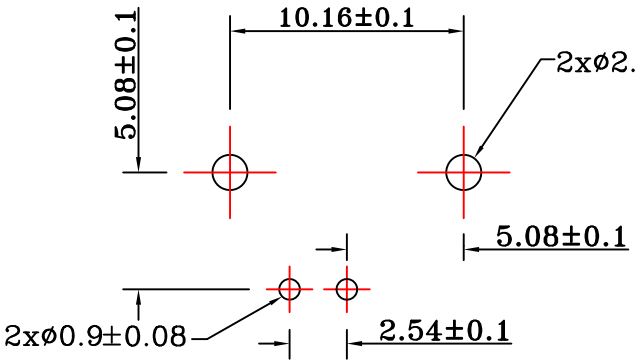

RECOMMENDED PCB HOLE

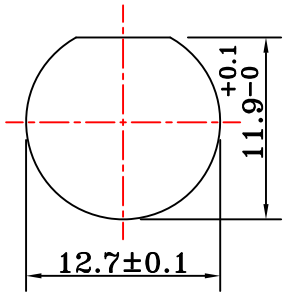

RECOMMENDED PANEL HOLE

ELECTRICAL PERFORMANCE:

1.NOMINAL IMPEDANCE _75_ OHMS.
2.FREQUENCY RANGE:0-1 GHz.
3.MAX PEAK VOLTAGE: 500V.
4.DIELECTRIC WITHSTANDING VOLTAGE:1500 VOLTS RMS.

ITEM	DESCRIPTION	MATERIAL	FINISHED	PART NUMBER
3	NUT	BRASS	NICKEL	073000-109
2	LOCK WASHER	SK-5	NICKEL	083000-509
1	GROUNDING	Cu COVERED STEEL	TIN	3106-002B1
	BOARD LOCK	P.BRONZE	TIN	
	CONTACT	P.BRONZE	GOLD & TIN	
	INSULATOR	P.P	NONE	
	BODY	ZINC ALLOY	NICKEL	

RoHS
COMPLIANT
2002/95/EC

UNLESS OTHERWISE SPECIFIED ALL TOLERANCES ARE:

DIMENSION		ANGLE	
INTEGRAL DIMENSIONS	±1.0	ANGULAR DIMENSIONS	±5.0°
1 PLACE DECIMAL	±0.5	HOLES UNDER ø0.5	±0.1
2 PLACE DECIMALS	±0.25	ROUGHNESS	

FINISH: SEE TABLE
MATERIAL: SEE TABLE

micon Precise Corp.

DRAWED BY:	TINA	DATE:	03-11'2000
ENGR BY:	TINA	DATE:	03-11'2000
APVD BY:		DATE:	

TITLE: BNC R/A JACK PCB RECEPTACLE
Model NO: 3106-002B
Drawing NO.: 3106-002B

UNIT:	MM	SIZE: A4	REV. F	CAD FILE :
SCALE:	2:1	SHEET 1 OF 1		Z:\Sales\BNC\